RG 190-39/18/2 TDMLO

DC centrifugal fan

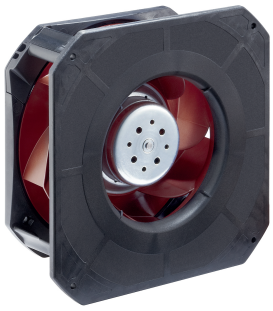

ebm-papst St. Georgen GmbH & Co. KG
Hermann-Papst-Str. 1
D-78112 St. Georgen
Phone +49 (0) 7724 81-0
Fax +49 (0) 7724 81-1309
info2@de.ebmpapst.com
www.ebmpapst.com

Nominal data

Type	RG 190-39/18/2 TDMLO	
Nominal voltage	VDC	48
Nominal voltage range	VDC	36 .. 57
Speed (rpm)	min^{-1}	3000
Power consumption	W	52
Min. ambient temperature	°C	-20
Max. ambient temperature	°C	65
Air flow	m^3/h	630
Sound power level	B	7.6

ml = Max. load · me = Max. efficiency · fa = Free air · cs = Customer specification · ce = Customer equipment
Subject to change

Technical description

General description	3-phase fan drive with very smooth operation and high efficiency Backward-curved RadiCal impeller
Housing material	Scroll housing made of glass-fiber reinforced plastic
Impeller material	Glass-fiber reinforced plastic
Weight	1.21 kg
Dimensions	225 x 225 x 85 mm
Airflow direction	Axial: intake, radial: discharge
Direction of rotation	Clockwise, viewed toward rotor
Storage	Ball bearing
Service life L10 at 40 °C	55000 h
Service life L10 at maximum temperature	30000 h
Cable	With leads AWG 18, 20 or AWG 22, TR 64. Speed signal and control input AWG 22

ebm-papst St. Georgen GmbH & Co. KG · Hermann-Papst-Str. 1 · D-78112 St. Georgen · Phone +49 (0) 7724 81-0 · Fax +49 (0) 7724 81-1309 · info2@de.ebmpapst.com · www.ebmpapst.com

Product drawing

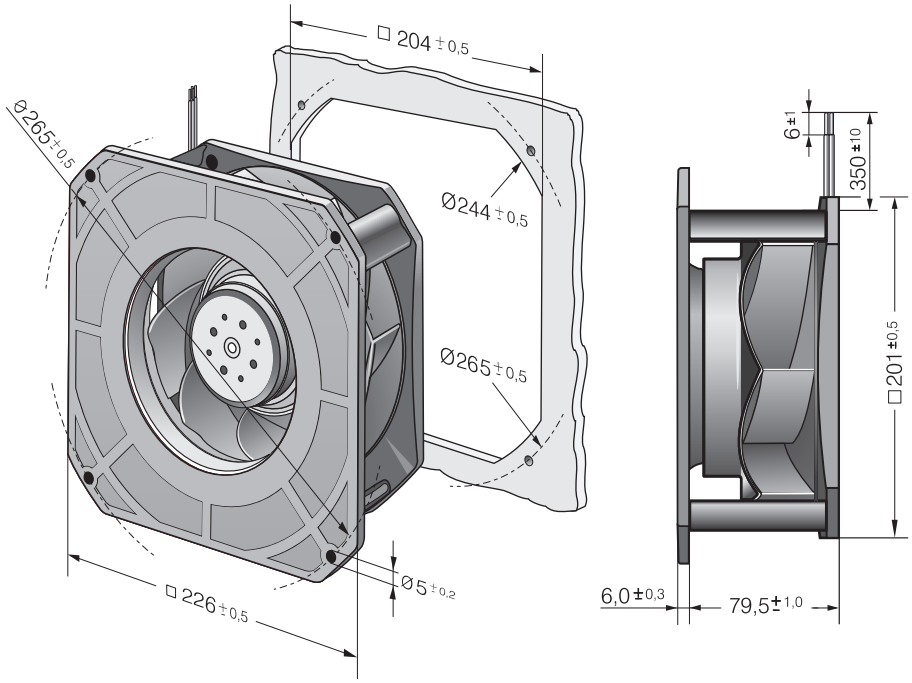

ebm-papst St. Georgen GmbH & Co. KG · Hermann-Papst-Str. 1 · D-78112 St. Georgen · Phone +49 (0) 7724 81-0 · Fax +49 (0) 7724 81-1309 · info2@de.ebmpapst.com · www.ebmpapst.com

Curves

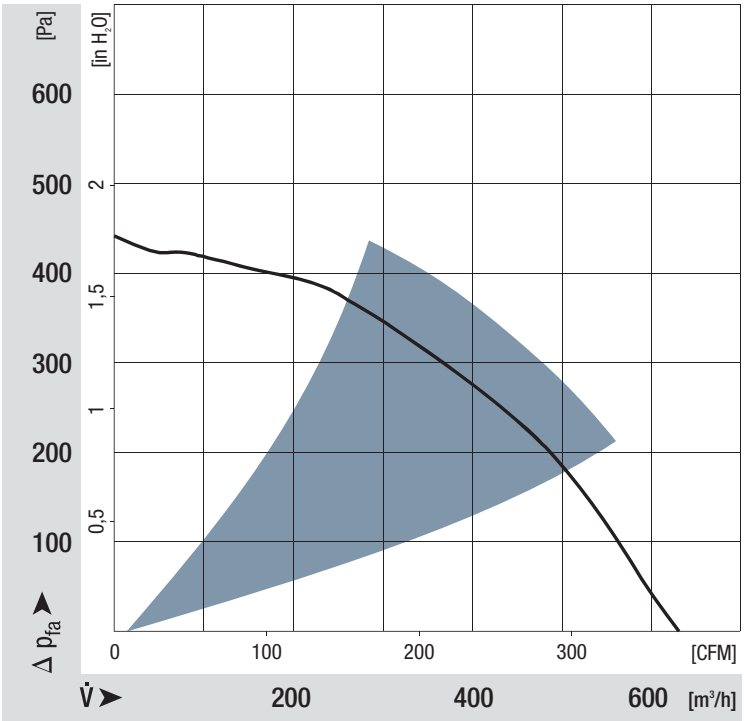

ebm-papst St. Georgen GmbH & Co. KG · Hermann-Papst-Str. 1 · D-78112 St. Georgen · Phone +49 (0) 7724 81-0 · Fax +49 (0) 7724 81-1309 · info2@de.ebmpapst.com · www.ebmpapst.com